TOTAL PETROCHEMICALS

Gonfreville Plant:Torque mesurement on integrally geared centrifugal Ethylene Compressor to diagnose start up problem

TOTAL

The Machine / Lay out & Duty

The Compressor

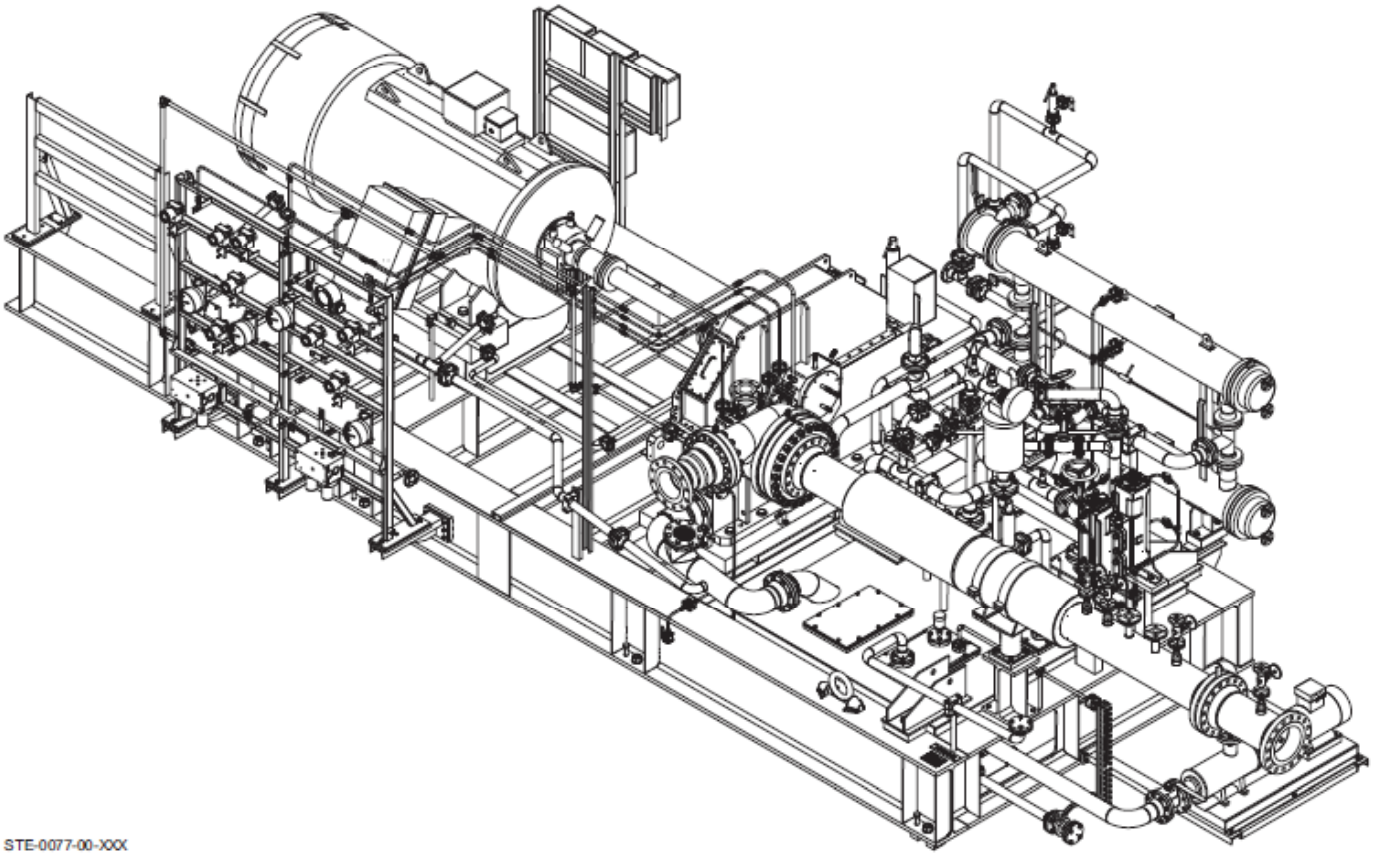

The Compressor / Problem discovered during Commissioning

- **Integrally geared compressor to supply PEL unit in Gonfreville**
  - Ethylen (C_2H_4, MW 28) compressed from about 15 bara up to 28 bara to supply PEL unit in fresh ethylene.
  - 1 impeller overhung, 1 bull gear, installed power 1MW capacity control with VFD
  - Input speed from 2300 up to 3000 rpm (is also bull gear speed), High speed shaft from 23000 up to 30000 rpm
  - Impeller diameter is 214 mm, 3D semi open, 14 vanes
  - Start up under suction pressure 12 up to 16 bara or Settle Out Pressure 20 bara

- **Problem during start up:**
  - High axial displacement of High speed shaft when machine is at standstill.
  - Normal axial position of high speed shaft during operation
  - With normal suction pressure start up is not achieved, too high torque to take off, trip from VFD, same result when max torque set point of VFD is increased. Start up is achieved when machine is depressurized

TOTAL

The Compressor

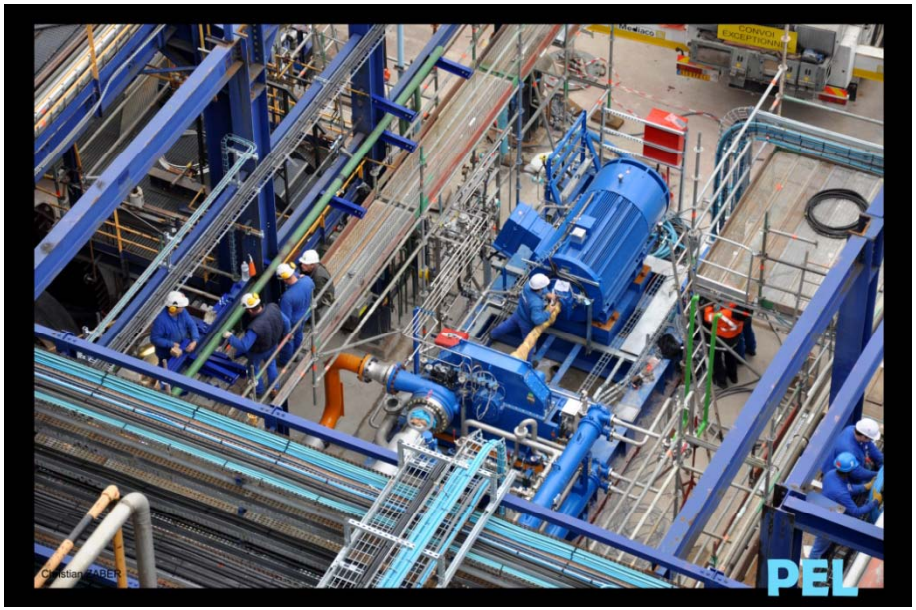

The Compressor / sectionnal drawing

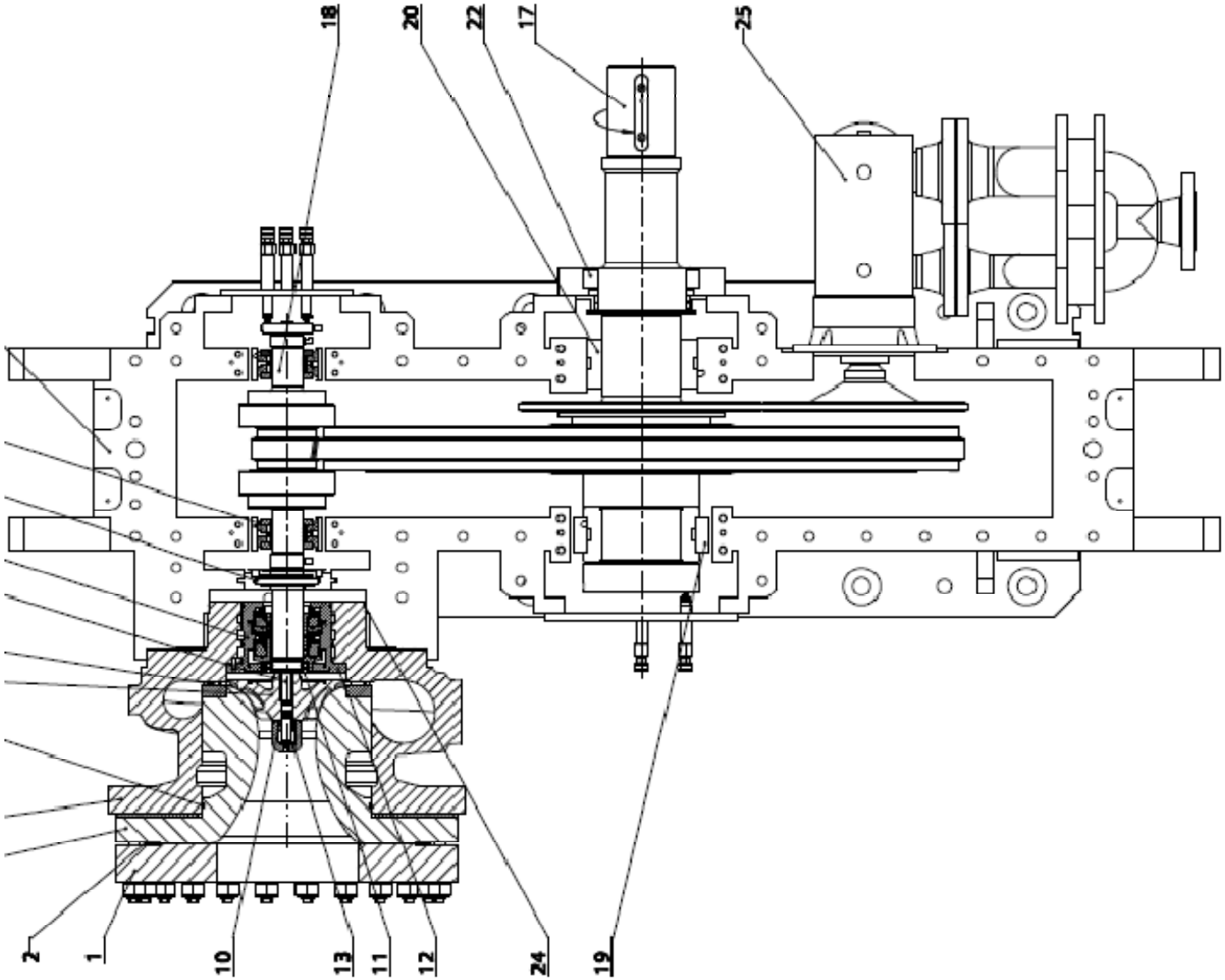

Diagnosis & Analysis

- High speed gear thrust is withstand with 2 collars on outer diameter of bull gear.The axial thrust supported by collar is balanced by teeth reaction because of axial reaction of helicoidal teeth.

- Axial thrust transmitted to bull gear is supported by an axial tilting pad axial bearing on bull gear.

gearbox

- At standstill, during pressurization of compressor we detect that bull gear is tilting in its radial bearing, leading to a larger axial displacement of high speed gear than addition of the 2 axial endfloat.

- See attached sketch, behaviour is confirmed by analysis of bull gear position in its bearing (bently nevada gaps): no more at bottom of bearing, pushed and stuck at top of bearing.

sketch tilting

Understanding of higher take off torque

- **No explanation from OEM to quantify higher take off torque except that everybody agree that bull gear is tilting but no figures neither calculations**

- **Total confirms the behaviour by depressurization of machine : we can see bull gear comes back at bottom of its bearing, and then machine is able to start up.**

- **Decision to mesure on site take off torque vs suction pressure (machine at standstill) and record torque vs speed during start up with several suction pressure.**
  - Quantify & mesure take off torque to convince compressor OEM and try to implemente a modification to fix the problem
  - Available techinical solutions :
    - increase motor torque
    - modify thrust bearing design to avoid tilting of bull gear
    - change operating and start up procedure (start up depressurized) : short term solution to keep machine in production

TOTAL

Torque measurement on field 1/2

- **Take off torque (without using Emotor) :**
  - Basic measure using :
    - Torque harm (chain wrench fixed on LS coupling, harm length is known)
    - A crane and a chainbloc
    - A dynamometer between chainbloc and torque harm

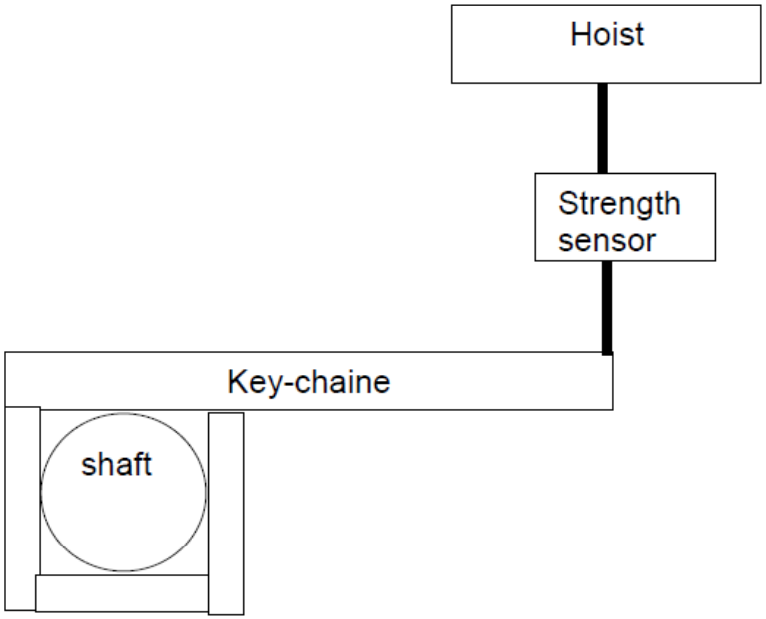

Torque measurement on field 2/2

- **Take off torque and torque curve up to nominal speed (using Emotor) :**
  - Measure using :
    - Stress probes fitted on input compressor shaft
    - Telemetry to get a wireless mesure of stress probes during rotation (transmitter is taped on shaft)

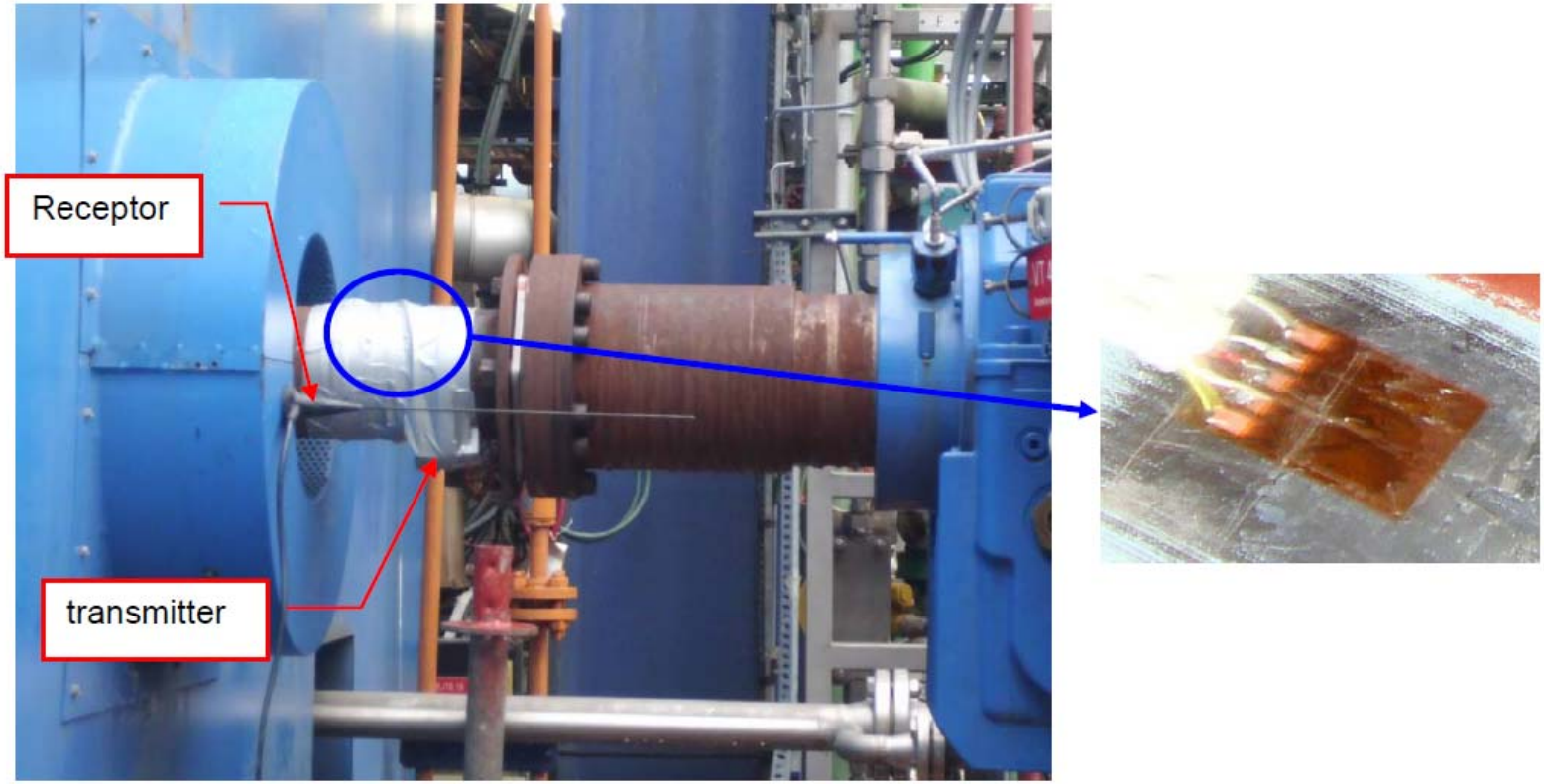

Torque measurement on field : the results

Summary of torque test measurements

Pressure	Load	Start-up torque (static test)	Start-up torque (run)	Running
14.5 bars	No	1451 N.m	1503 N.m	Yes
	Yes	1599 N.m	1658 N.m	Yes
15.5 bars	No	1473 N.m	1515 N.m	Yes
	Yes	1641 N.m	1685 N.m	Yes
16.5 bars	No	1611 N.m	1683 N.m	Yes
	Yes	1853 N.m		No
18 bars	No	1503 N.m	1589 N.m	Yes
	Yes	2114 N.m		No

- **With a pressure higher than 16.5 bars, compressor doesn't start-up when it's loaded.**
- **Compressor doesn't start-up with a torque higher than about 1700 N.m.**

Pressure	Charged
14.5 bars	No
14.5 bars	Yes
15.5 bars	No
15.5 bars	Yes
16.5 bars	No
16.5 bars	Yes
18 bars	No
18 bars	Yes

Charged = No means that the pressure inside the compressor is removed before putting it back to test pressure before a run.

Charged = Yes means that the pressure inside the compressor is not removed since the previous run.

TOTAL

Torque measurement on field : the results

Start-up torque

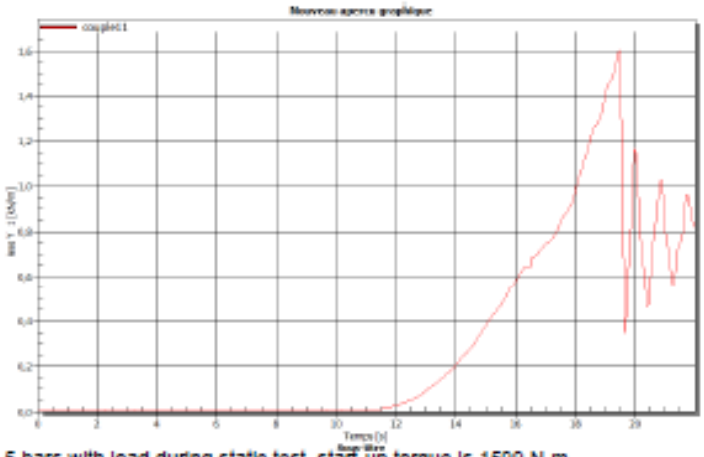

- At 14.5 bars with load during static test, start-up torque is 1599 N.m.

Axial Position of the shaft for start-up

probe	ZT4100-1M	ZT4100-2M	ZT4100-3M	ZT4100-4M
position	0.03948	0.03083	0.02333	0.03208

- At 14.5 bars with load, axial position of the shaft are lower than 0,039.

Start-up torque during a run

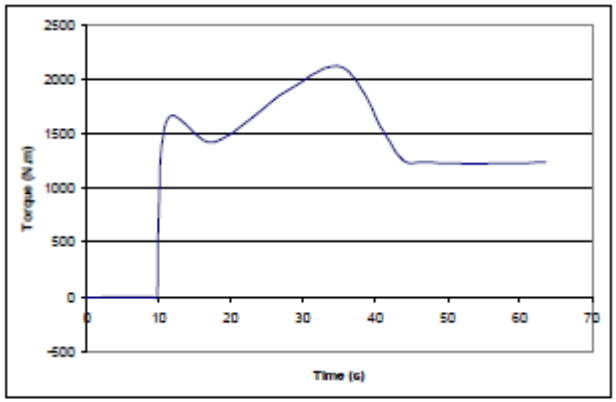

- At 14.5 bars with load during a run, start-up torque is 1658 N.m.

Conclusion

- Static and dynamic mesure are consistent
- Take off torque is minimized if machine, after its shutdown, is depressurized and repressurized before start up.
- Temporary solution : depressurized machine for start up to avoid bull gear tilting and minimize take off torque
- Take off torque is much more higher than the one estimated during engineering phasis: no explanation from OEM, waiting for OEM answer

- At 14.5 bars with load, axial position of the shaft are lower than 0,039.

Start-up torque during a run

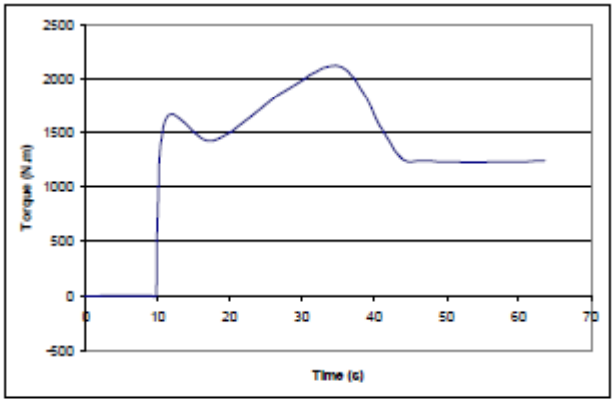

- At 14.5 bars with load during a run, start-up torque is 1658 N.m.

current torque curve Loher

- **Thanks for your attention, any questions?**